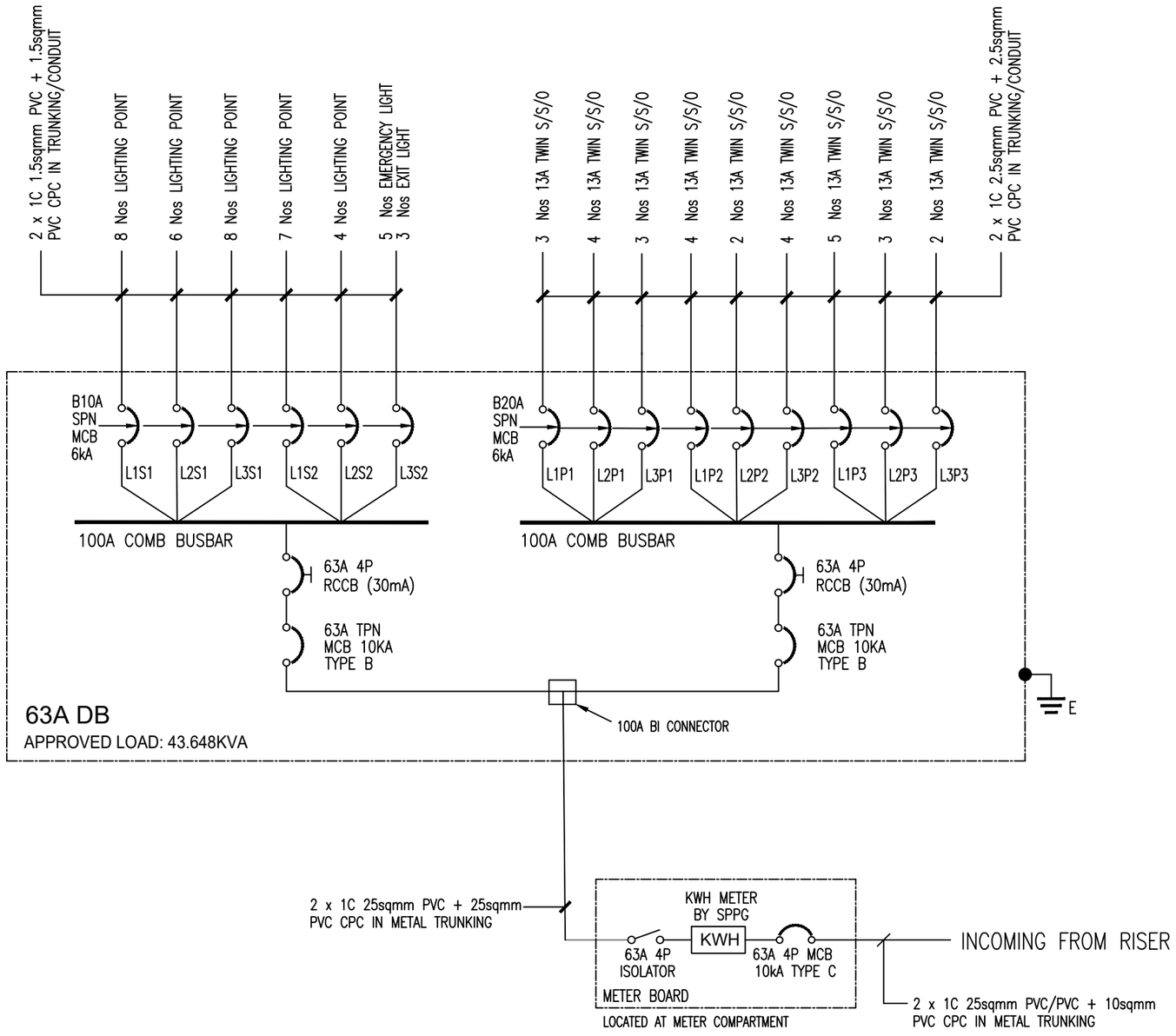

CLIENT / ADDRESS :	MAIN CONTRACTOR :	ELECTRICAL CONTRACTOR :	DRAWING TITLE :	LEW :	CHECKED :	DATE :
FYFE ASIA PTE LTD 6 CLEMENTI LOOP #02-20 SINGAPORE 129814			SINGLE LINE DIAGRAM (SLD) #02-20 FYFE (OFFICE)	SEOW SWEE LEONG EMA Licence No. : 8/25825	Ryan	29 MAY 2025
					DRAWING NO. : I2R-FYFE-CLE-SLD-OFF	REV : 0

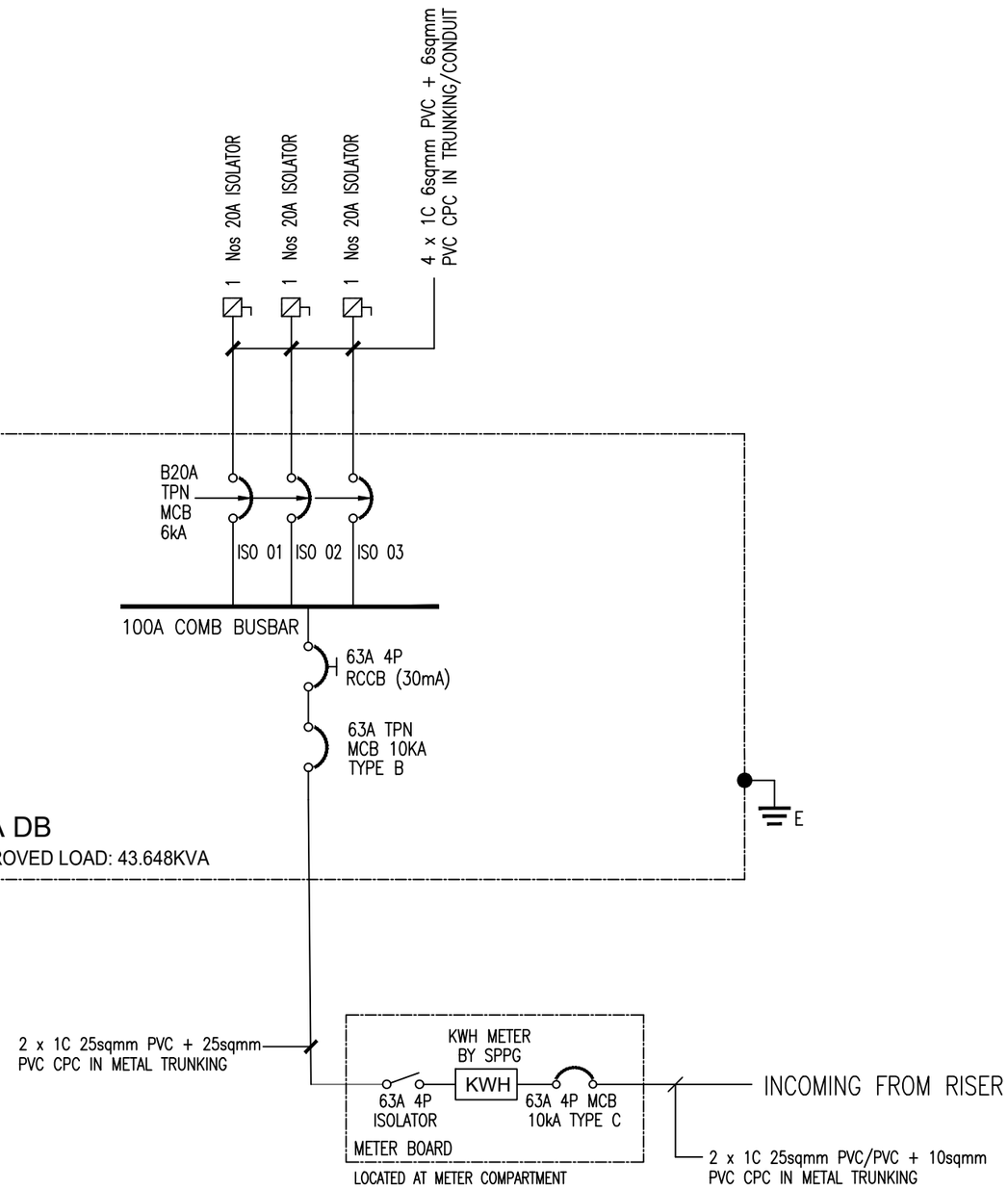

CLIENT / ADDRESS :	MAIN CONTRACTOR :	ELECTRICAL CONTRACTOR :	DRAWING TITLE :	LEW :	CHECKED :	DATE :
FYFE ASIA PTE LTD 6 CLEMENTI LOOP #02-20 SINGAPORE 129814			SINGLE LINE DIAGRAM (SLD) AHU 4-3 FYFE AC	SEOW SWEE LEONG EMA Licence No. : 8/25825	Ryan	29 MAY 2025
					DRAWING NO. : I2R-FYFE-CLE-SLD-AC	REV : 0